REBLOC RB80_8_N2/W3

DATA SHEET

standard element tested according to EN 1317-2

general

containment level:	N2 (N1)
level of working width:	W3 (W4-W8)
impact severity level/ASI:	B

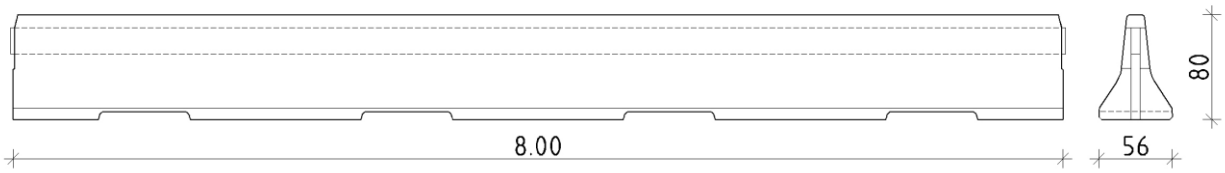

installation

single row (central reservation, verge)

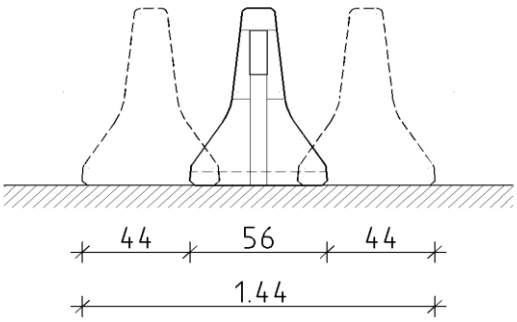

double row (central reservation)

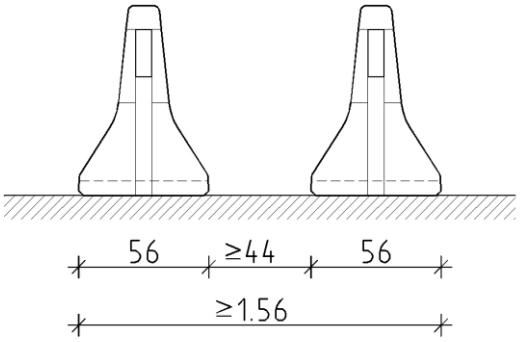

technical data

weight/element:	4.200 kg
minimum installation length:	112 m (without terminal elements)
anchorage:	only terminal elements (see data sheet RB80_4T)
curve radius:	r ≥ 108 m, smaller radius in combination with RB80_4 and RB80_2
concrete quality:	C30/37, freeze-thaw and de-icing resistant (according to national requirements)
coupling:	fully integrated, hot dip galvanized

system elements – combinable

standard element RB80_2
standard element RB80_4
standard element RB80_8_H1/W4
terminal element RB80_4T (1:5)
transition element RB80_100_4
transition element RB80_STEEL_4

© 2010 REBLOC GmbH